PART ONE

'Trojan' Top band

ERIC DOWDESV
G4

AS a life-long c.w. enthusiast the author is very gratified to see so many newly licensed amateurs beginning their activities using c.w. especially on Top Band. Indeed the number of recently issued callsigns appearing near the top of the lists of contest results must make many old-timers goggle in disbelief!

This equipment is suitable for newcomer and old-timer alike and is a true transceiver insofar as the transmitted and received frequencies are the same at all times and controlled by the main tuning dial. Intended for c.w. operating on Top Band this transceive facility is of great benefit in contests obviating the necessity for continually 'netting' the transmitter to the receiver as is required in some so-called 'transceivers' which are really a transmitter and receiver in a box with only the power supply in common.

True 'break-in' is possible in this design whereby incoming signals can be heard in the spaces of the actual dots and dashes. Alternatively a time delay of a second or two may be obtained between the end of a transmission and the receiver becoming operative again. The keying relay has only one single pole changeover contact the switching of the individual circuits being achieved with cheap silicon diodes.

Using a genuine 10 watts input (the legal limit on Top Band) the transceiver has given very good results on the air and using a half wave aerial excellent signal reports have been received from all over UK and some European countries. In contest operation it has left little to be desired. In practice it has been found that certain controls on the front panel could very well be relegated to the rear of the chassis.

Some refinements have been built in such as an output indicator and a p.a. grid current meter in order to make the transceiver as complete as possible but these can well be left to the discretion of the constructor.

OPERATION

The basic operation of the transceiver is best illustrated by reference to the block diagram Fig. 1. On receive the signal is amplified by V1 and passed to the mixer/oscillator V2 the output being amplified at 465kHz by V3 and V4 before being passed to the product detector. This uses diodes D1 and D2 to which is also fed the output of the b.f.o., the triode section of V4. The triode section of V3 functions as an audio amplifier feeding the headphones. As a refinement the audio also goes to the small speaker situated in the power supply unit.

On transmit the output of the first oscillator and the b.f.o. are fed into the transmitter mixer valve V5 the output of this being amplified by V6 which drives the p.a. stage V7. The triode section of V6 is a keyed tone oscillator feeding into the audio stage.

To obtain adequate selectivity a Q multiplier valve V8 has been included in the receiver.

CIRCUIT DESCRIPTION

On Receive Reference should be made to Fig. 3. Valve V1 is an ECC85 double triode used in a cascode configuration as an r.f. amplifier. In the author's experience this is the only worthwhile circuit that is effective against cross-modulation which can be a serious problem on Top Band shared as it is with various coastal stations on a.m.

Note that the input tuned circuit (1·8 to 2·0 MHz) for V1 is also the pi-network output circuit for the p.a. thus performing a dual function. The r.f. stage is fitted with a manual gain control VR1.

The r.f. stage is inductively coupled to the receiver mixer stage V2 which is the old favourite ECF82 the triode section first oscillator tuning 2265 to 2465kHz to provide an i.f. of 465kHz.

The output of the mixer feeds the i.f. amplifier

stages V3 and V4 both using ECF82's, with conventional i.f.t.'s, their gain being controlled by the manual gain control VR2.

Since the bandwidth of the i.f. stages at 3dB down with the i.f.t.'s alone is of the order of 4kHz at best the selectivity is quite inadequate for c.w. operation and so a Q multiplier was included in the design which when properly adjusted gives excellent selectivity.

The Q multiplier circuit used has appeared quite frequently and has been used by the author on several receivers with very satisfactory results. The Q multiplier valve, V8, an ECC83 double triode, is connected to the anode of the receiver mixer stage V2 thus providing the necessary selectivity early on in the process of amplifying the signal and

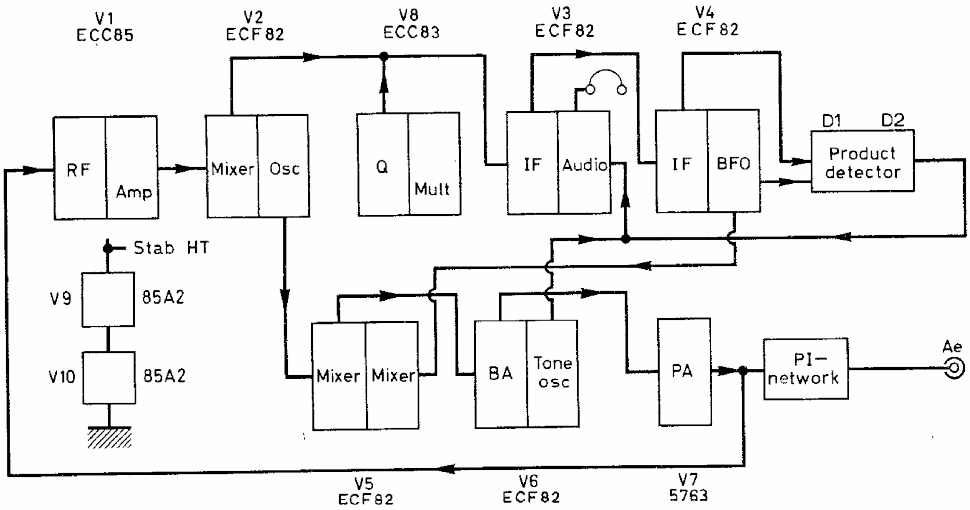

▲ *Fig. 1: Block diagram to illustrate the function of the various stages of the 'Trojan' transceiver.*

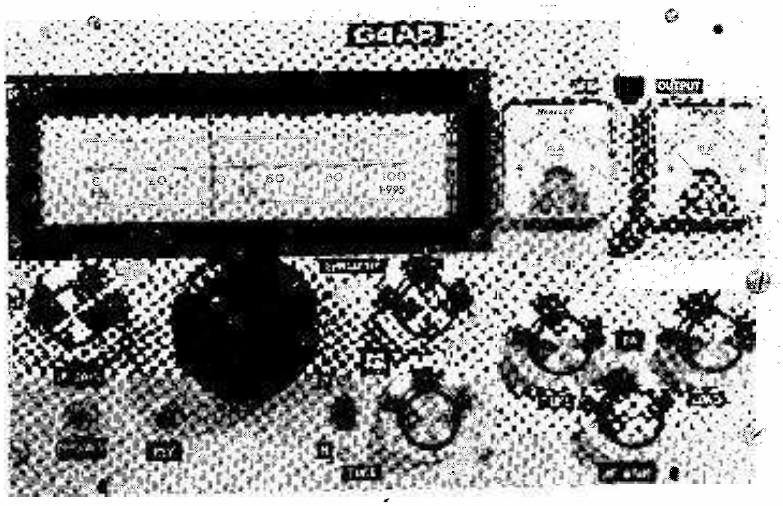

l Transceiver

VELL
-AR

thus reducing the risk of cross-modulation in later stages.

The gain of the Q multiplier stage and hence the selectivity is controlled by VR3 and switch S2 allows the Q multiplier to peak a wanted signal or to null out an interfering signal. A big advantage of the circuit used here is that the b.f.o. remains on a fixed frequency while the desirable feature of "incremental tuning" on receive is obtained by tuning the Q multiplier across the i.f. pass-band with panel control VC4.

Normally the b.f.o. is tunable a few kHz either side of its nominal frequency but in a transceiver this would mean that the transmitted and received frequencies would be offset which defeats the whole object unless complicated switching is employed to return the b.f.o. to its nominal frequency on transmit.

The signal from V4 at 465kHz goes to the product detector circuit D1 and D2, the triode section of V4 functioning as the b.f.o. on a fixed frequency of 465kHz also. After filtering, the audio signal from the p.d. is routed back to the triode section of V3, an audio amplifier, feeding the headphones via the matching transformer T1. As already mentioned the audio signal is also fed to a small speaker, located in the power supply unit, which is very useful for monitoring purposes while working in the shack. A switch is fitted to disconnect the speaker when using the headphones.

The audio output is adequate for the headphones but not enough to warrant the use of a volume control so this was omitted.

On Transmit As stated previously the transmitted signal is always on the same frequency as that to which the receiver is tuned, to permit single channel working, so to understand how this is achieved the following example may help.

With an incoming signal of, say, 1900kHz the first oscillator is on 2365kHz the difference frequency of 465kHz being amplified and detected as already explained, the b.f.o. also being on 465kHz. If these two frequencies, 2365 and 465kHz are now fed to a separate mixer valve the difference of 1900kHz can be selected and amplified and used to drive the p.a. stage of the transmitter. A little consideration will show that this condition obtains whatever the input signal frequency.

In Fig. 3 the outputs of the two oscillators are fed to the transmitter mixer stage V5, another ECF82, the output circuit of which is fixed tuned to the centre of the band at 1900kHz by L4 and C30. This drives the buffer amplifier V6, an ECF82, which is also tuned to 1900kHz by L5 and C35, this stage driving the p.a., a 5763, to 10 watts input.

The p.a. grid current of 3mA is constant across the band and is shown on the 5mA meter M1. This meter can be switched by the slide switch S1 to give an indication of the transmitter output level using the diode D7 across the low impedance output circuit.

The p.a. anode circuit is a conventional pi-network with component values chosen to permit loading into a coaxial feeder. The anode end of the network is coupled to the grid of the r.f. stage by C44 so acting as the input circuit on receive.

Note that the pi-network tuning capacitor VC1b and the receiver mixer grid circuit tuning capacitor VC1a are ganged so that peaking signals with this control also peaks the transmitter r.f. circuits. The

main tuning control VC2 tunes only the first oscillator. Adjustment of trimmer TC1 and the core of L2 enables full coverage of the band, 1·8 to 2·0MHz to be obtained.

On transmit the triode part of V6 acts as an audio oscillator using the centre-tapped primary of a transistor output transformer T2 which with the capacitor C38 gives a pleasant tone of about 800Hz.

In the interests of stability both oscillators are fed from a stabilised supply of 170V using two 85A2's, V9 and V10. As a matter of interest the main h.t. of 270V varies by only 8V between the receive and the transmit modes.

Receive/Transmit Switching The change-over involves muting the receiver part of the transceiver and activating the transmitter portion in the proper sequence as well as providing for a keyed audio tone to permit proper monitoring.

Operation of the key at jack J1, Fig. 3, energises the relay RL1 which is a simple single pole change-over relay on a B7G base. However any relay capable of following the keying will do if the correct operating voltage is applied. If true "break-in" is not required then the capacitor C27, 200μF, can be connected across the relay coil which will cause the relay to stay "on" after the key is lifted thus providing a short delay of a second or two before the receiver becomes operative again.

The relay now does not have to be able to follow the keying and an inexpensive type may be used.

The functions initiated by the relay are as follows: with the key up, cathode return circuits of the r.f. and i.f. stages are at earth potential via diodes D3 and D5 and relay contact R and the receiver functions normally.

The transmitter mixer V5, p.a. stage V7 and the audio oscillator (triode part of V6) are biassed off by the negative bias line via R43. With the key down the relay operates and opens the r.f. and i.f. cathode circuits and contact R rendering the receiver inoperative.

The grid return circuits of the transmitter mixer, p.a. and audio oscillator are earthed through relay contact T, diode D4 and the key and the transmitter operates. The keyed audio tone is fed to the grid of the audio output stage and heard in the headphones.

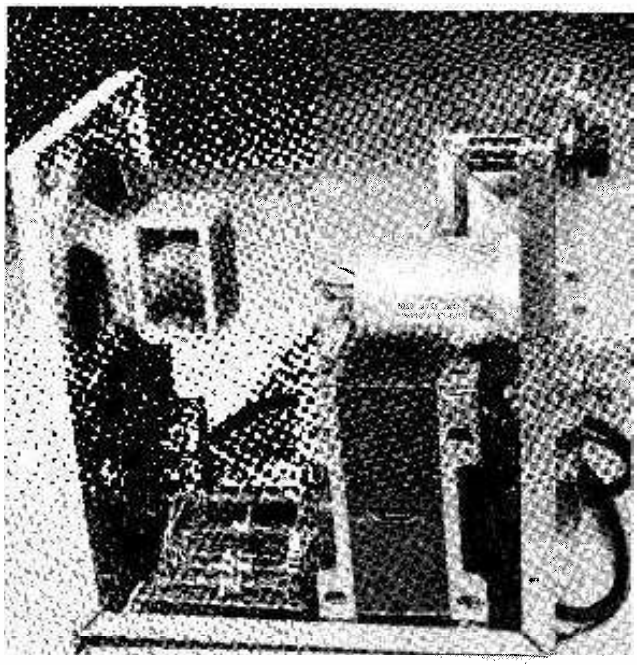

A view of the power supply unit.

POWER SUPPLY

A separate power supply unit is used to provide the h.t., heaters, bias voltage and relay operating voltage from a single transformer, T1, Fig. 2. Rectifier diodes are all silicon BY100's similar to those used in the switching circuits of the transceiver. Choke input smoothing is used to assist in obtaining good output voltage regulation. Switch S2 cuts the h,t. to the p.a. to allow the transmitter driver stages to be aligned using the p.a. grid current meter as an indication of the drive level.

Transformer T2 in the power supply unit matches the speaker to the output winding of the receiver audio stage, but the choice of transformer will depend upon the impedance of the headphones and speaker chosen.

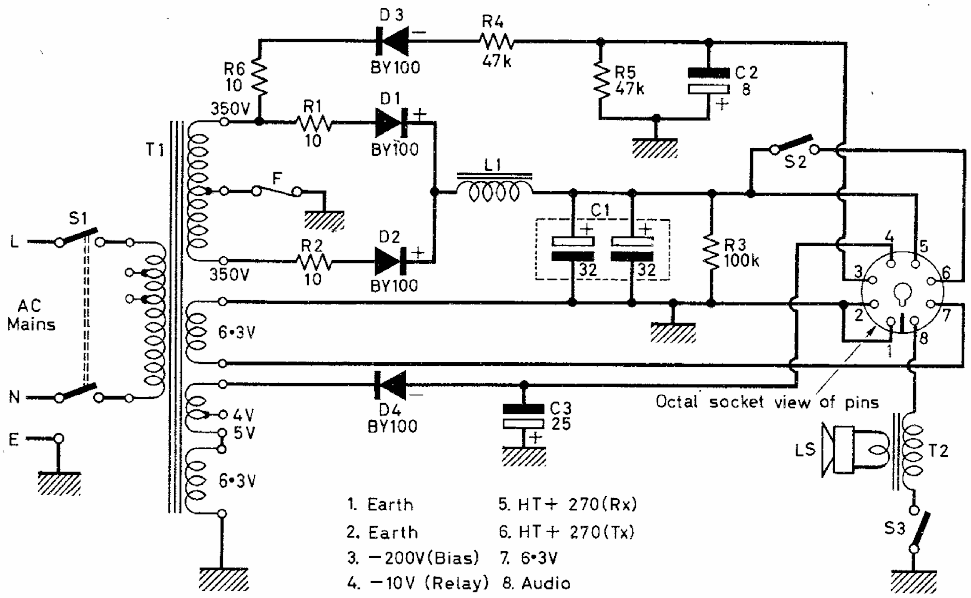

Fig. 2: Complete circuit of the transceiver power supply unit. Capacitor C1, smoothing choke L1, fuse holder and h.t. switch S2 are all mounted on the rear face of the one-piece chassis. See photograph above.

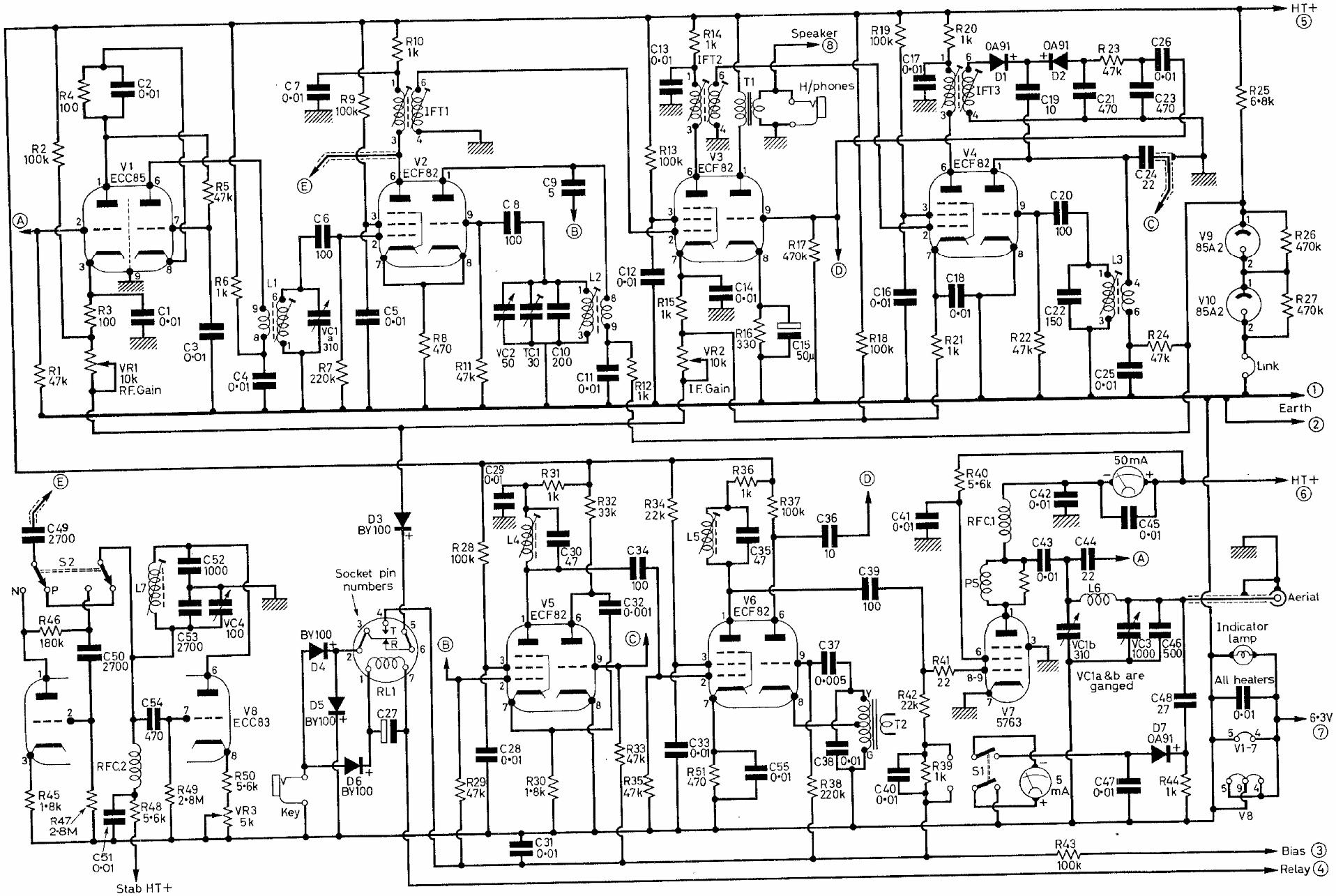

Fig. 3: Circuit of the 'Trojan' transceiver. The value of C27 across the relay coil is discussed in the text. A capacitor 0.01μF should be shown between the junction of R36/L5 and earth.

CONSTRUCTION

The form of construction used combines the advantages of the solidarity of the usual aluminium chassis with the accessibility of the flat circuit board. Two pieces of 6 x 6in. copperclad s.r.b.p. board are trimmed to 6 x $5\frac{7}{8}$in. and later fitted to an aluminium framework to form a chassis.

The majority of the wiring of the boards is done before they are fitted to the framework the layout of the boards being shown in Fig. 4, the copper side being underneath. The holes for the valveholders can be easily cut with a chassis cutter care being taken to ensure that the cutter itself goes through the board from the copper-clad side to avoid the possibility of lifting the copper. Similarly, holes should be drilled from the copperclad side.

The B9A valveholders and skirts are fixed with nuts and bolts but the B7G ones can be soldered to the copper, without skirts. Very few nuts and bolts are needed in this form of construction, connections to the boards being soldered wherever possible, thus saving a lot of time. No difficulty will be experienced soldering to the copper with a 25W iron although the author used a Weller dual-heat gun for most of the time.

Since the screening cans for the i.f.t.'s, b.f.o. and other inductors are on top of the board care must be taken to ensure that they are properly earthed. This was done by taking a thin copper wire from a lug on each screening can, passing it through the core adjustment hole and soldering it to the board underneath. A check for earthing should be made between each screening can and earth. Details of the fixing holes for the various i.f.t.'s etc. are supplied by the manufacturer.

The Denco r.f. and mixer coils plug into B9A valveholders and the aluminium containers in which they are supplied are used as screening cans as suggested by the makers. However, there is no objection to inverting the coils and using the single hole fixing taking the coil leads through holes in the boards. A small hole is drilled in each can to permit adjustment of the core.

The p.a. coil former is mounted on 1in. pillars and the coil ends taken through clearance holes in the board to the pi-network capacitors below. When winding this coil leave several inches of wire at each end for this purpose. The r.f. output indicator components, D7, C47, C48 and R44 are mounted on a small piece of Veroboard and wired directly to the associated tags on the slide switch S1.

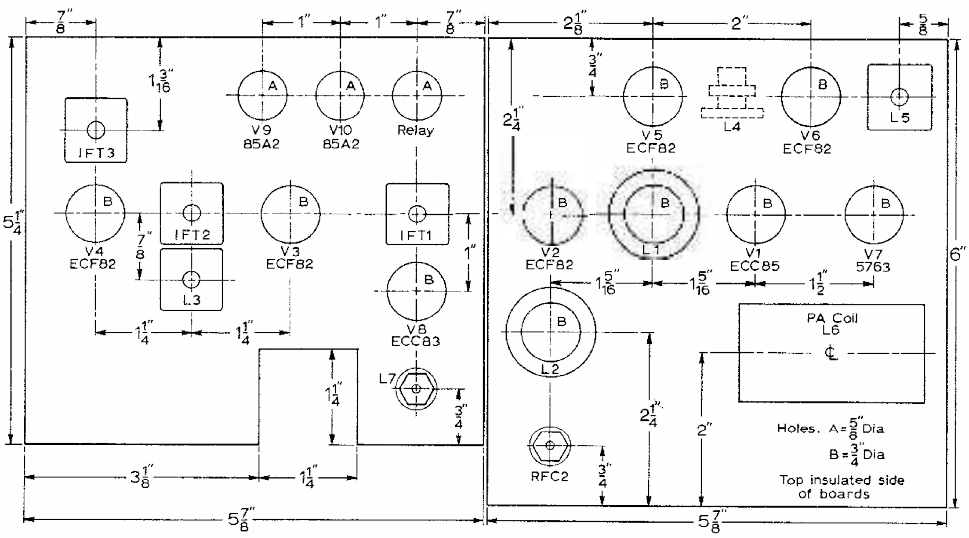

Fig. 4: Layout of the major components on the two copper-clad boards. Care must be taken to ensure that valve and coil screens are properly earthed. See text.

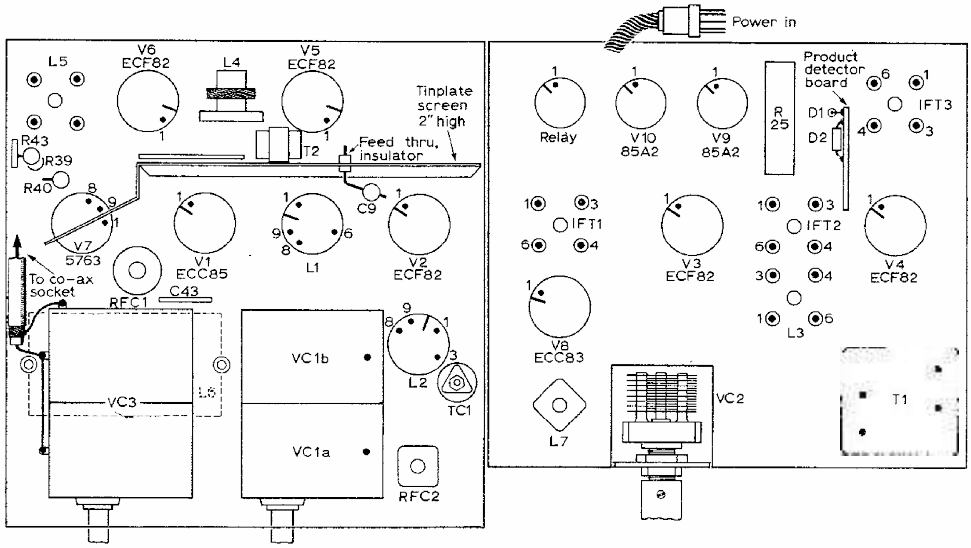

Fig. 5. Reverse view of boards. The interconnections between the boards are completed after the boards are assembled on the chassis. The screen on the lefthand board may be soldered in position after completing the wiring of V1 and V2 and V7.

★ components list

Resistors:

R1 47kΩ	R14 1kΩ	R27 470kΩ	R40 5·6kΩ1W
R2 100kΩ	R15 1kΩ	R28 100kΩ	R41 22Ω
R3 100Ω	R16 330Ω	R29 47kΩ	R42 22kΩ
R4 100Ω	R17 470kΩ	R30 1·8kΩ	R43 100kΩ½W
R5 47kΩ	R18 100kΩ	R31 1kΩ	R44 1kΩ
R6 1kΩ	R19 100kΩ	R32 33kΩ½W	R45 1·8kΩ
R7 220kΩ	R20 1kΩ	R33 47kΩ	R46 180kΩ
R8 470Ω	R21 1kΩ	R34 22kΩ	R47 2·8MΩ
R9 100kΩ	R22 47kΩ	R35 47kΩ	R48 5·6kΩ
R10 1kΩ	R23 47kΩ	R36 1kΩ	R49 2·8MΩ
R11 47kΩ	R24 47kΩ	R37 100kΩ	R50 5·6kΩ
R12 1kΩ	R25 6·8kΩ	R38 220kΩ	R51 470Ω
R13 100kΩ	R26 470kΩ	R39 1kΩ	

All ¼W 10% except as indicated. R25 is 5W

VR1 10kΩ linear VR3 5kΩ linear
VR2 10kΩ linear

Capacitors:

C1 0·01μF	C19 10pF poly	C37 0·005μF mica
C2 0·01μF	C20 100pF SM	C38 0·01μF
C3 0·01μF	C21 470pF mica	C39 100pF SM
C4 0·01μF	C22 150pF SM	C40 0·01μF
C5 0·01μF	C23 470pF mica	C41 0·01μF
C6 100pF SM	C24 22pF poly	C42 0·01μF
C7 0·01μF	C25 0·1μF	C43 0.·01μF
C8 100pF SM	C26 0·01μF	C44 22pF SM
C9 5pF poly	C27 see text	C45 0·01μF
C10 200pF SM	C28 0·01μF	C46 500pF SM
C11 0·01μF	C29 0·01μF	C47 0·01μF
C12 0·01μF	C30 47pF SM	C48 27pF SM
C13 0·01μF	C31 0·01μF	C49 2700pF disc
C14 0·01μF	C32 1000pF SM	C50 2700pF disc
C15 50μF 12V	C33 0·01μF	C51 0·01μF
C16 0·01μF	C34 100pF SM	C52 1000pF SM
C17 0·01μF	C35 47pF SM	C53 2700pF SM
C18 0·01μF	C36 10pF poly	C54 470pF SM
		C55 0·01μF

All 0·01μF are ceramic disc 500VW

VC1a-b 310+310pF variable ganged (Jackson Type E2)
VC2 50pF variable (Jackson Type C804)
VC3 500+500pF variable (Jackson Type 0)
VC4 100pF variable (Jackson Type C804)
TC1 3-30pF Philips trimmer

Valves and Diodes:

V1 ECC85	V5 ECF82	V9 85A2
V2 ECF82	V6 ECF82	V10 85A2
V3 ECF82	V7 5763	
V4 ECF82	V8 ECC83	
D1 OA91	D4 BY100	D7 OA91
D2 OA91	D5 BY100	
D3 BY100	D6 BY100	

Inductors:

L1 Range 3 Yellow (Denco)
L2 Range 3 Red (Denco)
L3 BFO (Denco BFO2/465)
L4 QA11D (Osmor) see text
L5 QA11D (Osmor) see text
L6 45 turns 20 s.w.g. 1¼" dia closewound enamel
L7 HQ4 (Electronics Techniques (Anglia) Ltd. Viking Works, Kirton, Ipswich, Suffolk 10/-+ 1/- p.p.)
IFT 1, 2, 3 (Denco IFT11/465)
RFC 1,2 2·5 mH
PS Parasitic suppressor: 10 turns 18 s.w.g. wound on 47Ω ¼W resistor

Miscellaneous:

Tuning dial (Jackson Type SL16). Meters 5mA and 50mA f.s.d. (Henrys MRA-38). Valve holders B9A (10) with skirt and screens (7), B7G (3). Slide switches 2 pole 2 way (2). Jack sockets (2). Knobs NK2 (6) Indicator lamp holder and lamp 6·3V. Relay, single pole 2 way, 600Ω, on B7G base (Henrys Type 10). T1, output transformer to suit headphones Octal plug. P.A. coil former 1¼in. dia. (G. W. Smith). Instrument case and panel, 12 x 7 x 7in. (H. L. Smith, Type W).

POWER SUPPLY

Resistors:

R1 10Ω ½W	R3 100kΩ 2W	R5 47kΩ 1W
R2 10Ω ½W	R4 47kΩ 1W	R6 10Ω ½W

Capacitors:

C1 32+32μF 350V C2 8μF 350V C3 25μF 25V

Miscellaneous:

D1-4 BY100, S1 2 pole on/off toggle. S2 Single pole on/off toggle. S3 Slide switch. L1 Smoothing choke 10H 100mA. Transformer 350-0-350V 80mA, 6·3V 3·5A, 6V1A, 5V tapped at 4V (Henrys Type MT2AT). T2 Matching transformer (see text). Fuse 500mA and holder. Octal socket. Speaker 4in. Chassis 7 x 7 x 4in. wide (H. L. Smith, Type P) Cover 7 x 7 x 4in. wide (H. L. Smith, Type A)

Before beginning the wiring of the boards it is a good idea to identify each valveholder and coil-holder with a small sticky label marked V1, V2, L1, etc., to prevent confusion. The boards are wired separately, only being brought together when fitted to the framework. A single 18 s.w.g. insulated wire is run round the valveholders for the heater wiring the other side of all heaters being soldered to the board at the valveholder. Capacitors of 0·01μF are wired between each live heater and earth.

Little need be said on the rest of the wiring which is quite conventional, the location of the major components under the boards being shown in Fig. 5. Component earth returns are soldered direct to the board with long leads being left on items that are later wired to panel-mounted components. Certain leads are screened as shown in Fig. 3.

The small screen shown alongside the transmitter mixer and buffer stage is fabricated from thin tin-plate and soldered to the board. Miniature tag strips are soldered to the screen to accommodate various feed resistors from these stages. The transformer T2 is likewise soldered to the screen.

The two-ganged capacitors VC1a-b and VC3 are bolted to the board, the spindles passing through clearing holes in the panel. The buffer anode coil L5 is mounted in an old i.f.t. screening can but the mixer anode coil L4 is unscreened. Both these coils are Osmor l.w./m.w. tuning coils with the l.w. and aerial coupling windings removed by sliding them off the formers. On L4 the two unused pins are soldered to the board, acting as supports for the coil.

In the Q multiplier circuit the two leads from R46 to the peak-null switch must be kept well apart or the nulling will not be very effective. The usual circuit has been slightly modified to allow one side

of the Q muliplier tuning capacitor VC4 to be earthed.

A short flexible link is used at the earthy end of the voltage stabiliser chain to permit the stabliser current to be measured and adjusted to about 8mA after the preliminary alignment has been carried out.

Panel Assembly The panel is part of the instrument case Type W obtainable from H. L. Smith Ltd. and the layout is shown in Fig. 6. It is advisable to fit the two meters and the complete tuning mechanism to the panel before it is joined to the framework and circuit boards otherwise certain screws become inaccessible.

The bottom corners of the dial itself are cut away, as is shown in the photograph, in order to provide clearance for the i.f. gain and Q multiplier selectivity potentiometers. The tuning dial is bolted to the panel with 6BA bolts with nuts used as spacers behind the panel but care must be taken not to overtighten the nuts as the escutcheon is very flexible and the glass easily broken, (it was!). Since the original dial pointer was several "kHz" wide it was unsoldered and replaced with one fashioned from a short piece of 20 s.w.g. copper wire hammered flat and painted white.

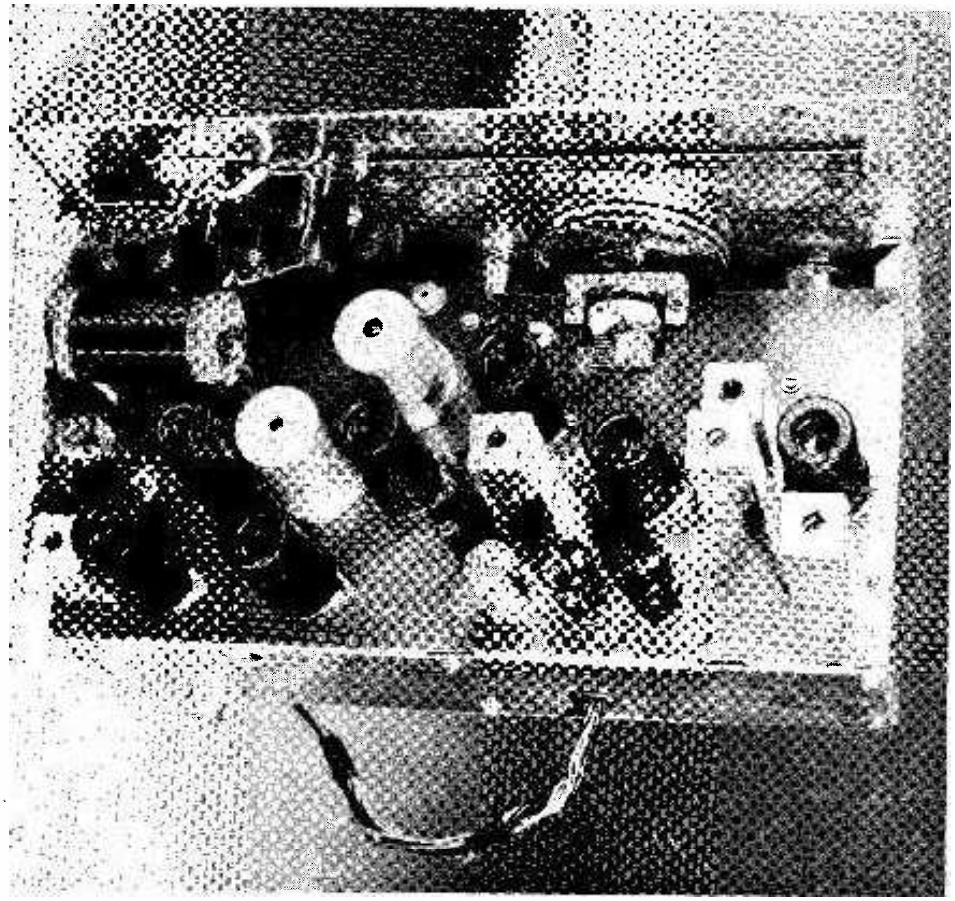

▲ *Top-of-chassis components shown in this view of the transceiver can be readily identified by reference to Fig. 4.*

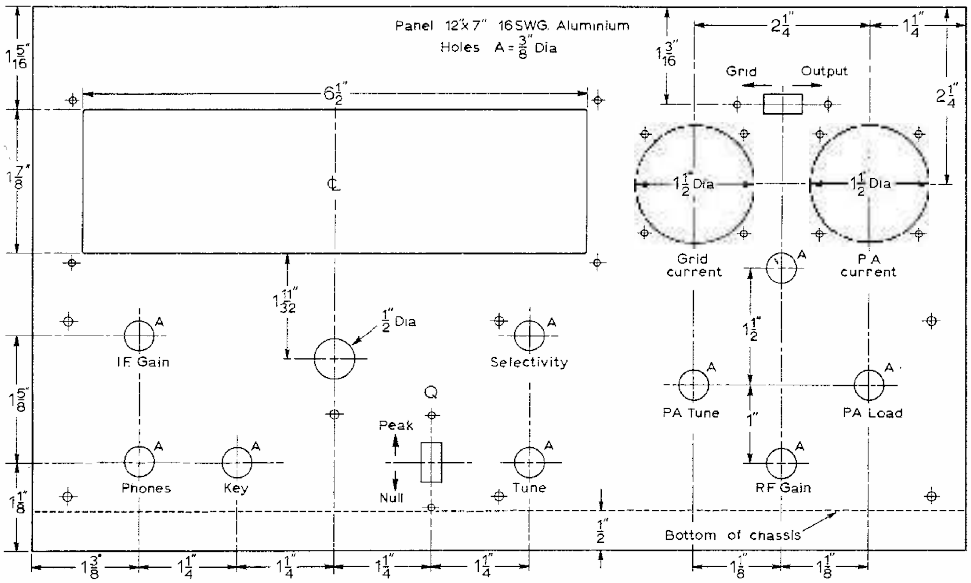

◀*Fig. 6: Drilling and layout data for the panel. Full information for fitting is supplied with the dial. The indicator lamp is mounted centrally below the meters.*

NEXT MONTH :— FINAL ASSEMBLY AND ALIGNMENT INFORMATION FOR THE 'TROJAN' TRANSCEIVER

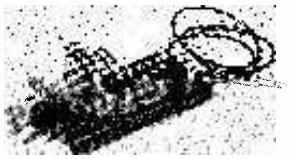

TO BE CONTINUED