PW DART QRP TOP BAND TRANSMITTER

by Rev G.C. Dobbs G3RJV & Colin Turner G3VTT PART 2

Following on from the general description and details of the v.f.o./mixer board given in Part 1 this concluding part covers the remaining two boards and setting-up details.

The layout for the Amplifier/Changeover Board is shown in Fig. 3. The audio gain control, R23, is mounted on the back of the case because once set it rarely requires readjustment. The whole amplifier is very simple and can be tested with a pair of headphones on the output when it is built. The same board carries the changeover circuitry including the voltage source for unbalancing the mixer for c.w. operation.

The changeover relay is a small 12 volt double-pole-changeover type. As there are several suitable types all with differing conections a space has been left on top of the p.c.b. to stick the relay by its casing with glue or

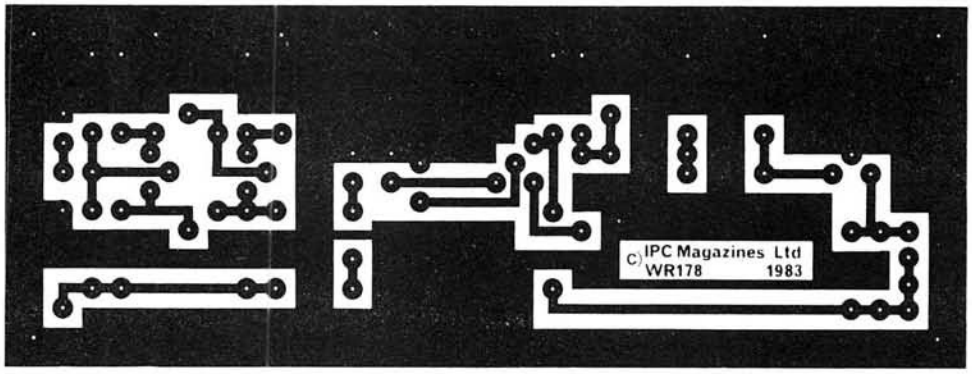

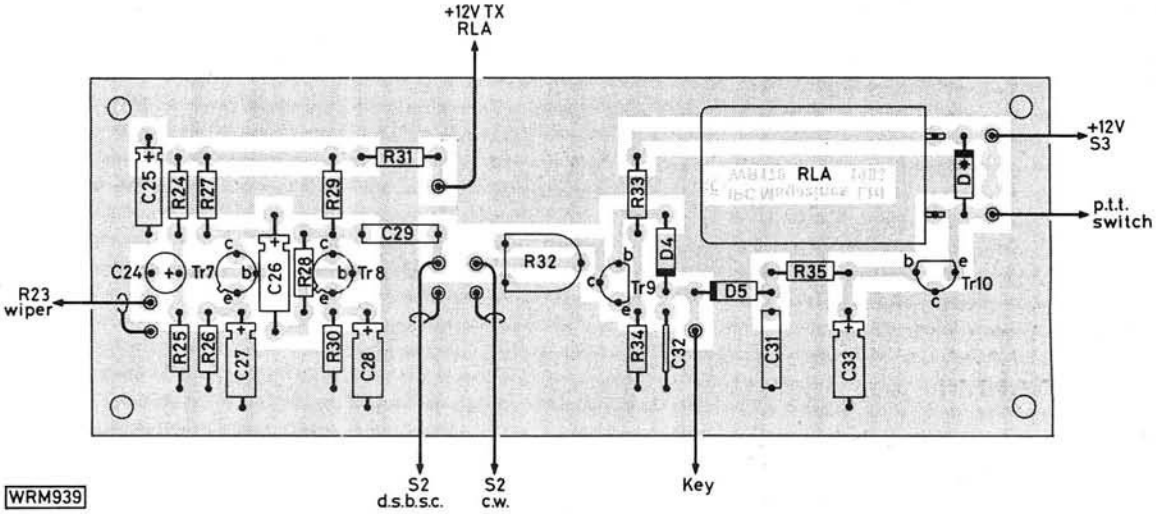

Fig. 3: Full size p.c.b. track pattern and component placement details of the combined audio processing/changeover board. D* is a 1N4001 and is provided to block back e.m.f. generated by RLA

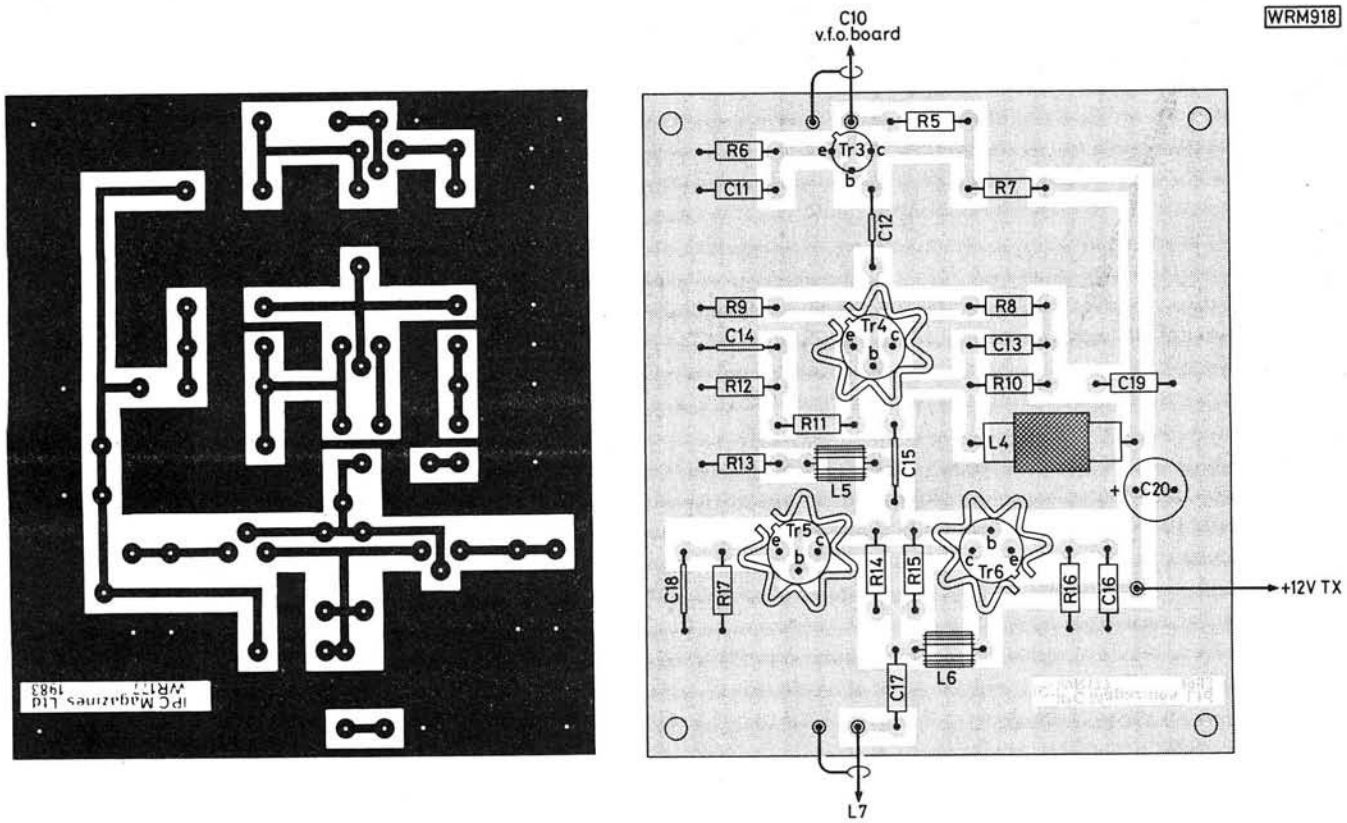

Fig. 4: Component placement and p.c.b. track pattern details of the p.a. stage, shown full size

Blutack. The changeover circuit provides the required supplies on transmit and receive for the various sections of the circuit as well as switching the antenna input between the transmitter output and a socket which leads to the receiver. The signal leads should be screened cable.

This board when built can be tested in conjunction with the v.f.o./Mixer module by connecting a receiver to the output of C10. Monitoring the signal on headphones, it should be possible to obtain d.s.b.s.c. signals with S2 in the d.s.b.s.c. position, and then in the c.w. position increase the voltage output from R32 until a c.w. signal can be keyed. Check the action of the changeover. The relay should hold in between words at the normal c.w. keying speed of the operator. If the action is too fast C33 may be increased to hold RLA1 on longer in keying spaces.

The p.a. Board, shown in Fig. 4 is simple to build although the spacing around the two output transistors is a little tight when the star type heatsinks are added to the transistors. The driver stage, Tr4, also requires a small star type heatsink. Inductors L5 and L6 are both homemade from ferrite beads with 8 turns of 32 s.w.g. enamelled wire. Care must be taken in winding these chokes to avoid scraping the enamel off the wire. The winding is a bit of a tight fit but in the past I have got 12 turns onto a ferrite bead with care, so 8 turns should be no real problem. Capacitor C21 is a front panel control and the prototype had L7 mounted on the side of the back set of vanes of this capacitor. Inductor L7, which is wound on a T68-2 toroid comprising identical 10 turn 28 s.w.g. link windings (a) and (c) wound over the 28 s.w.g. 50 turn resonant section (b), can be attached to a piece of plastic board; the prototype used a matrix board called "Perfboard" which is like Veroboard without the copper tracks. Capacitor C21 is any reasonable sized two-gang 365pF variable capacitor with both gangs wired in parallel. Screened leads take the signal to and from the C21/L7 circuitry.

The whole of the circuit of the resistive s.w.r. bridge is contained on the back of the switch, S1, and the panel meter, M1. The layout of the components on the back of the switch with some spare contacts used for interconnection tags is shown in Fig. 5. Resistor R22 is soldered directly onto the back of the meter. The prototype uses a miniature edgewise meter of some 200μA full scale deflection but almost any moving coil meter with a full scale deflection of 1mA or less can be used. Screened leads are

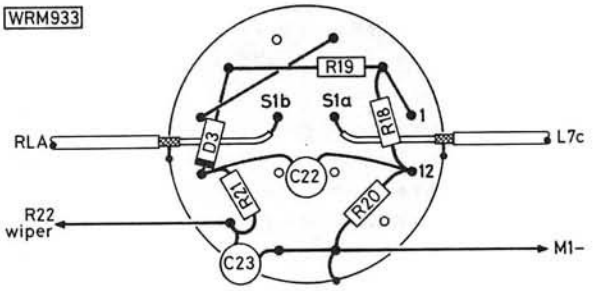

Fig. 5: Details of the s.w.r. bridge which is mounted on wafer switch S1

Please note that transistors Tr4-6, Tr1, 2 should have 2N prefixes and not ZN as shown in the components list.

Readers who intend to operate the *PW* Dart should be in possession of the appropriate licence issued by the Department of Trade and Industry to those who have passed the City and Guilds Radio Amateurs' Examination. Details may be obtained from: The Department of Trade & Industry, Radio Regulatory Department, Amateur Licensing Section, Waterloo Bridge House, Waterloo Road, London SE1 8UA.

used in the connection to and from the s.w.r. bridge. This bridge is a very compact and useful little circuit which I have used on a whole variety of QRP transmitters.

Receive Offset

The v.f.o. is left running the whole time to aid stability. The prototype v.f.o. was very stable after the usual movement caused by junction warm up in an f.e.t. oscillator. This means that if the transmitter is switched on to receive there could be some v.f.o. present on the received signal due to leakage through the mixer. In the prototype this was of such low order as to present no problem. If it is a problem the easiest way to deal with it is to offset the frequency of the v.f.o. during receive. This takes the v.f.o. out of the passband of the receiver so that no signal from the v.f.o. is heard on receive. A suitable circuit for this is shown in Fig. 6. A capacitor and a diode form a capacitive circuit across the v.f.o. tuned circuit. On receive 12 volts is applied to this circuit and the capacitance shift should take the v.f.o. out of the passband of the receiver. The values shown should do the job but the capacitor may require some adjustment in value to suit individual versions of the v.f.o. This capacitor should be a silver mica type and the additional circuitry added to the v.f.o. must be solid and directly wired to maintain stability.

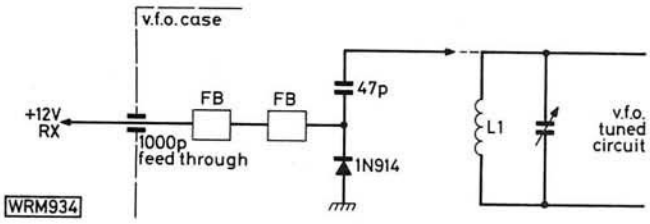

Fig. 6: Circuit details of the optional receive offset circuit which if fitted must be mounted within the v.f.o. housing in close proximity to the main tuned circuit

Transmitter Netting

If the v.f.o. leakage through the mixer is small—as it should be—then it is difficult to net the transmitter without putting it on to transmit. This is undesirable as some means of locating the transmitter frequency on the receiver, without transmitting, is required to avoid one being a nuisance to other operators. This is quite simple to do by putting S2 into the c.w. mode and pressing the press to talk (p.t.t.) switch on the microphone. This switches on the p.a. without allowing a full signal to reach the output giving plenty of signal to locate the frequency of the transmitter.

The *PW* Dart transmitter represents about the simplest way to put a phone signal onto an amateur band. The tuning-up procedure is simple using the three positions of S1. Resistor R23 should be set to give just enough injection to the mixer to produce a reasonable carrier signal on key down. Reports on the air suggest that most people with s.s.b. transceivers or good receivers think that it is a single sideband suppressed carrier signal. Not bad for a few cheap and standard components. ●

1) *SPRAT, Journal of the G-QRP Club* (Autumn 1981), c/o G3RJV, 17 Aspen Drive, Chelmsley Wood, Birmingham, B37 7QX.